DUBLEX

Automation made easy

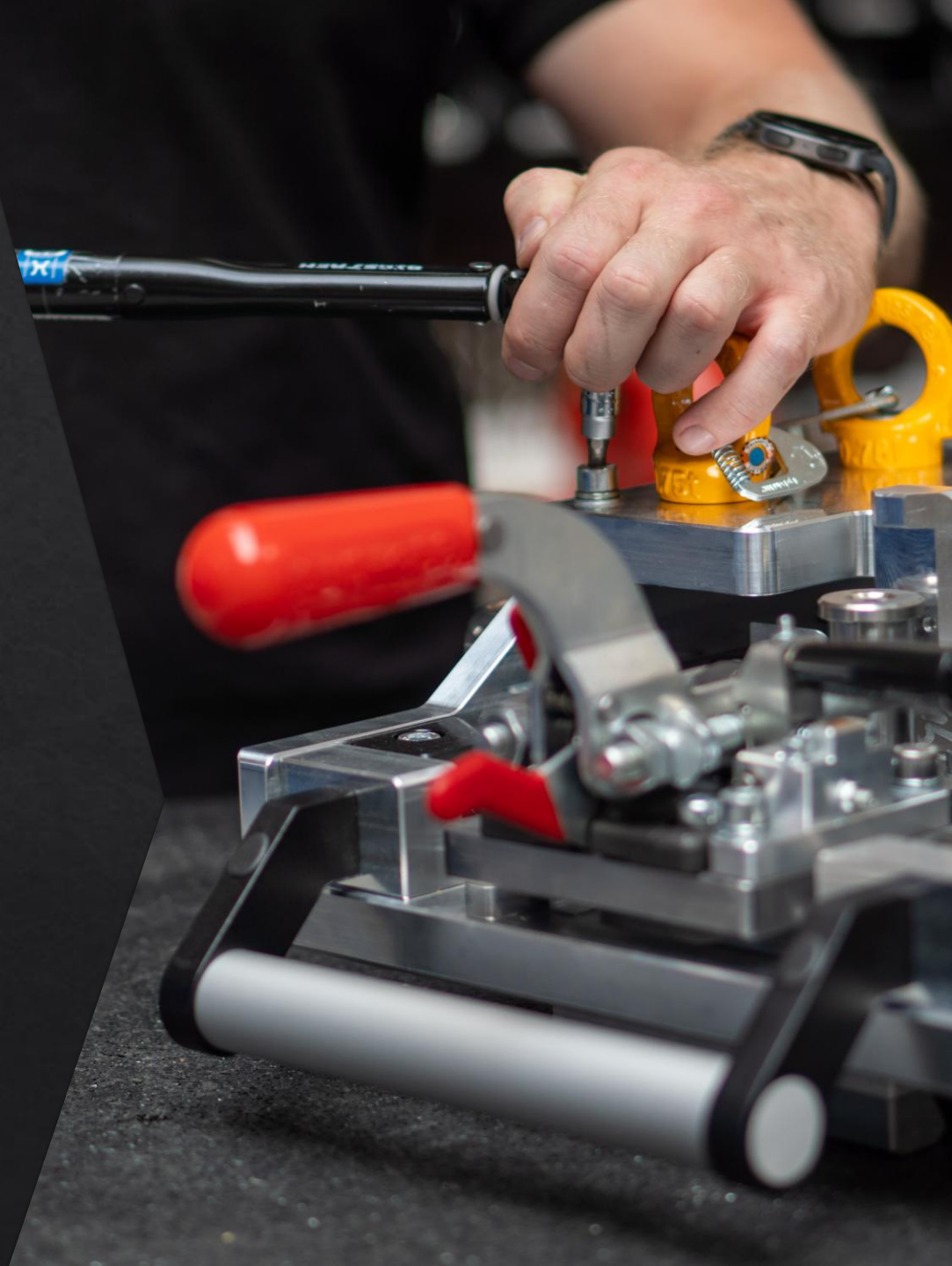

DUBLEX

WHO ARE WE?

We are a forward-driven engineering and automation company in the heart of Central Europe, delivering stable and innovative solutions.

DUBLEX

TOPICS TO BE COVERED

- Establishment and history
- Our team
- Work Procedure
- Portfolio
- Location and HQ

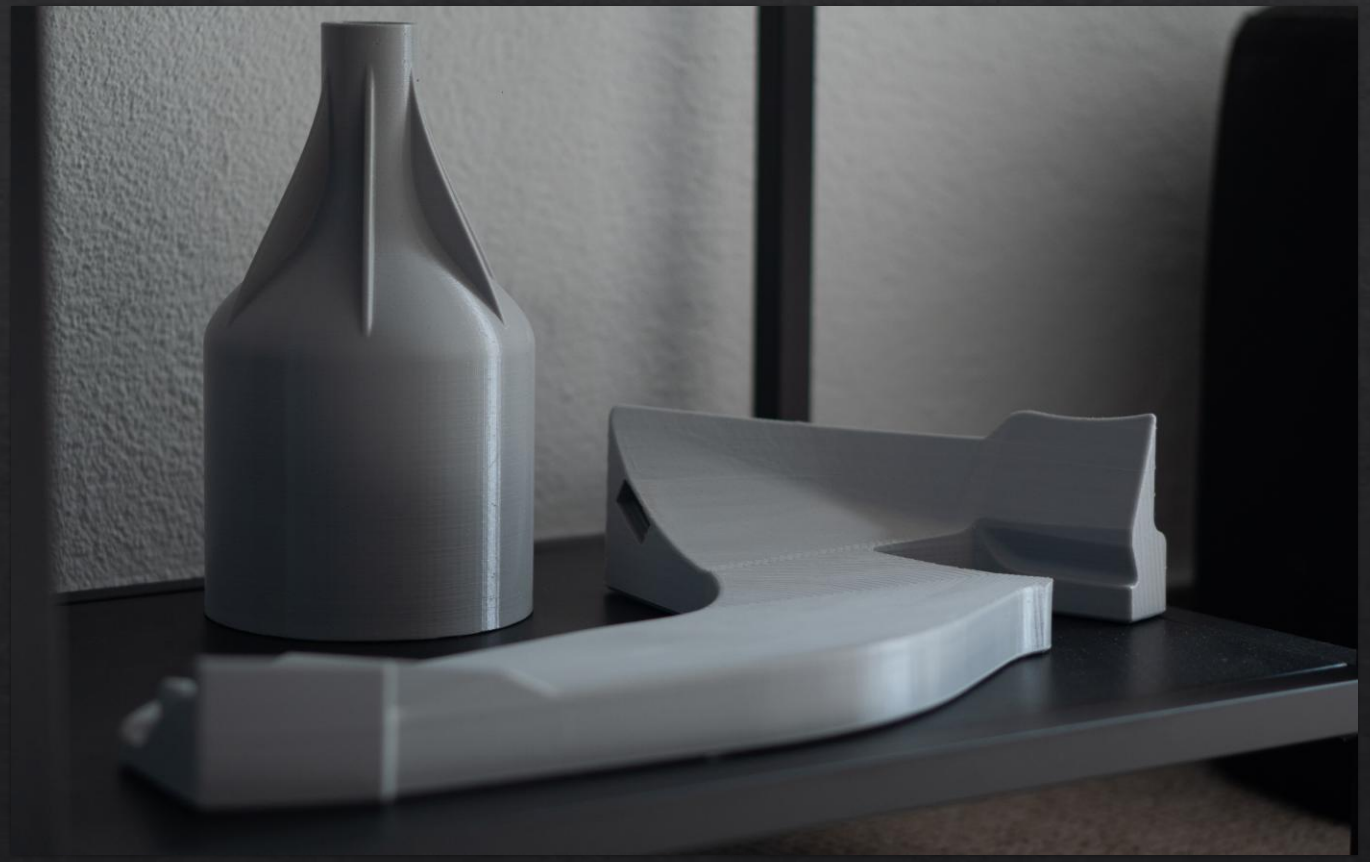

DUBLEX

ESTABLISHMENT AND HISTORY

2018

Company was founded as a result of a 7 years of personal experience in automation industry and engineering by our current CEO.

2020

Our Company specialized during first years mainly in Project managemen t for major automotive projects.

2021

This was our breakthroug h year. We‘ve became one of the main contractors for the biggest Automotive producer in Slovakia.

2022

We‘re following up on a successful year and aiming on doubling the volume of projects as well as our company turnover.

2023

Expanded internationall y and gained significant clients, and multiplied project deliveries.

2024

Strengthened partnerships and optimized internal processes.

2025

We changed our premises and expanded into mechanical engineering production.

DUBLEX

WORK PROCEDURE

INSPECTION & TECHNICAL ANALYSIS

To fulfill our customers needs, we are always trying to understand their project requirements. Therefore we emphasize the importance of thorough inspection on the spot.

TECHNICAL SOLUTION PROPOSAL

We always try to come up with tailor made technical solutions. We have vast options in this regard, and it‘s up to the customer, what they choose.



FINAL HANDOVER

Our Company puts a lot of emphasis on a Quality control. Handing in substandard result won‘t happen with us. We guarantee additional technical support, also after project completion.

EXECUTION

Thanks to our great team of design engineers, mechanics, electricians, fabricators and programmers, we are able to provide exceptional performance and quality.

DUBLEX

PORTFOLIO

Showcase of our recent projects in automation and engineering

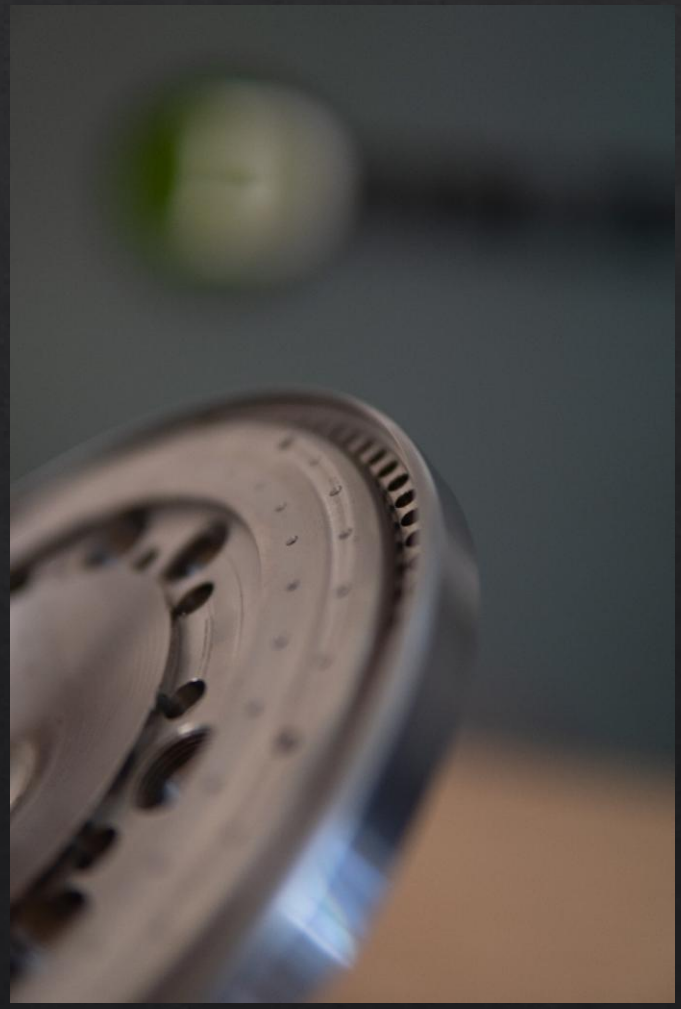

DUBLEX

SEMI-AUTOMATIC MANIPULATOR FOR WHEEL ASSEMBLY

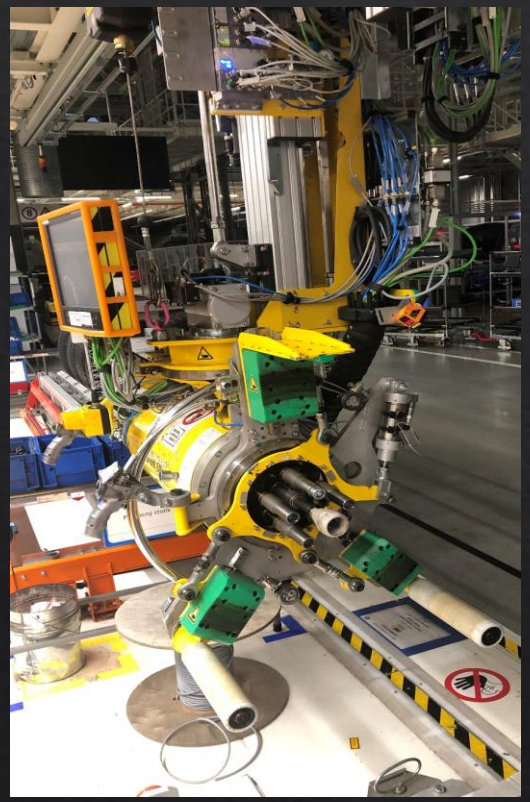

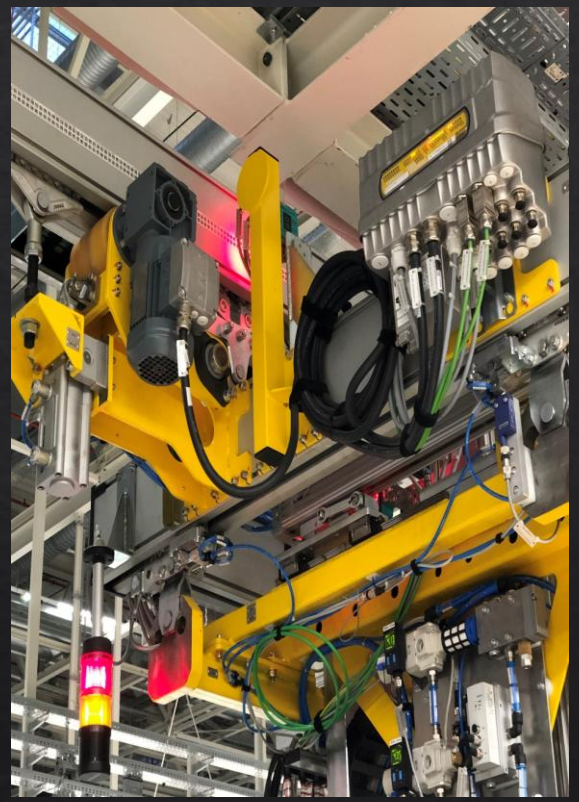

- Complete development & 3D design
- Construction of steel frame
- Mechanical and electrical installation of horizontal and vertical drives
- Design and installation of wheel gripper
- PLC programming
- Electrical and pneumatic schematics and drawings
- Complete integration & commissioning of the device

DUBLEX

SEAT INSTALLATION MANIPULATORS



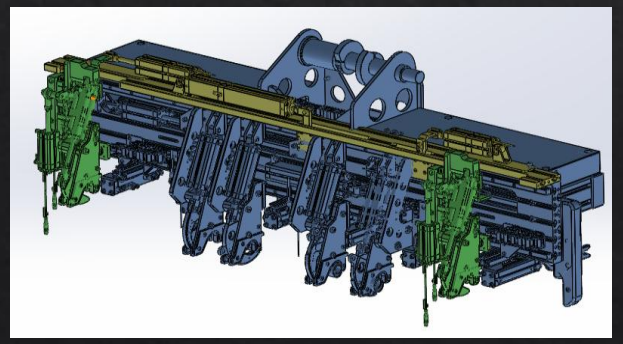



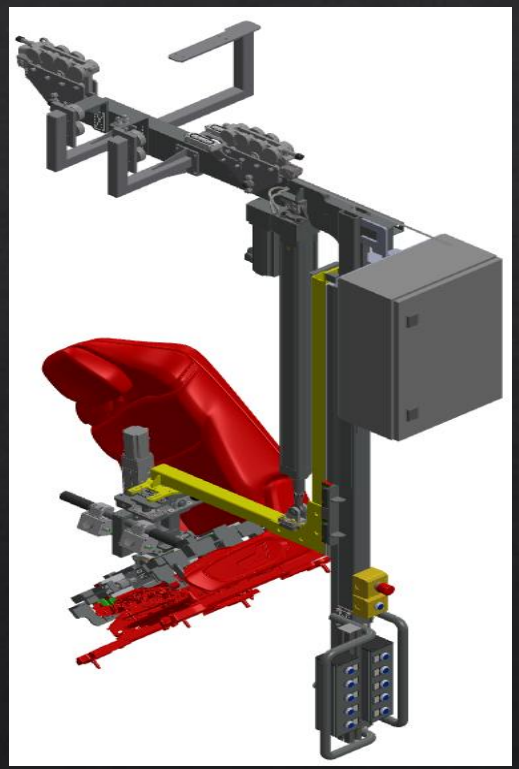

- Development, production, and installation of multiple manipulators for seat installation in vehicles.
- We have integrated manipulators for the 1st, 2nd, 3rd rows and Captain Chairs into various types of vehicles.
- These semi-automated manipulators enhance the efficiency of the manufacturing process.

DUBLEX

MANIPULATOR FOR DOOR REMOVAL

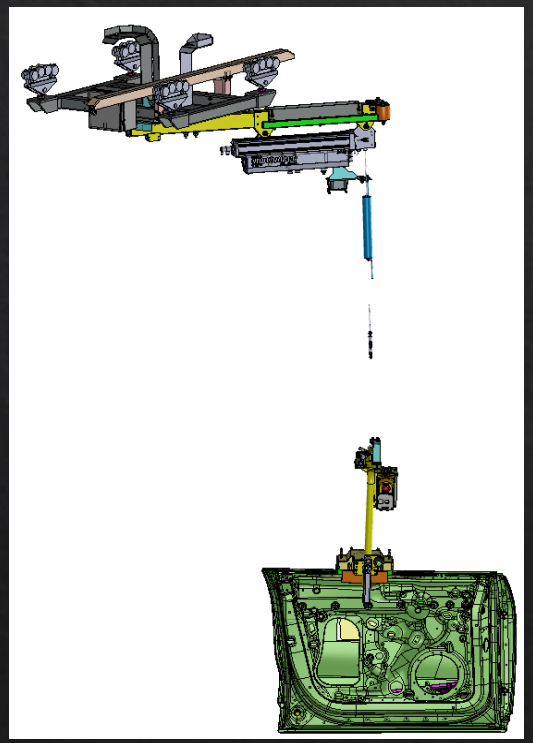





- Designed for safe and efficient door removal and reinstallation on automotive assembly lines.
- Operated by qualified personnel, using a handle to clamp and release doors.
- Equipped with a signaling beacon to indicate operational status
- Operates with an electric-pneumatic lifting mechanism.
- Enhances productivity by streamlining the door removal process from various vehicle models.

DUBLEX

MANIPULATOR FOR THE INSTALLATION OF AHV





- Used for the installation of towing equipment on vehicle bodies.
- Operates as an electric lifting device, controlled by an operator via a panel.
- Movements are managed through a control panel with features for raising, lowering, and clamping the load.
- Designed to enhance efficiency by integrating tow hitches into various vehicle models

DUBLEX

VEHICLE FOR METROLOGY









- Automated system for metrological control of fuel dispensers.
- Performs accurate volume measurements for diesel, gasoline, AdBlue, and LPG.
- Equipped with image processing and AI to ensure reliable and efficient checks.
- Supports remote operation and control via PC and tablet.

ELECTRONICS AND PCB DEVELOPMENT



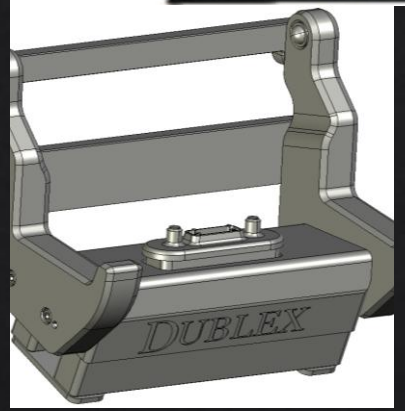

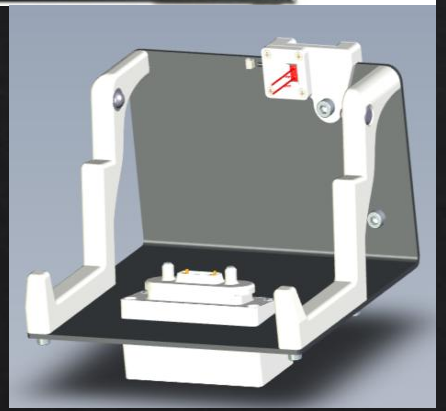

- Custom electronics and PCB development, including Steuerboxes
- Tailored battery solutions based on client specifications
- Optimized performance and precision for diverse applications

AUTOMATED ADHESIVE APPLICATION TABLE

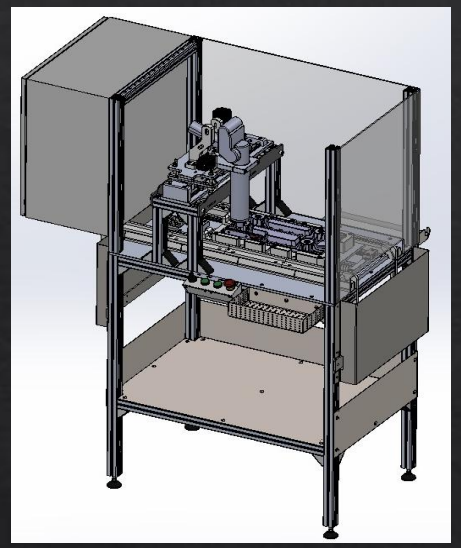

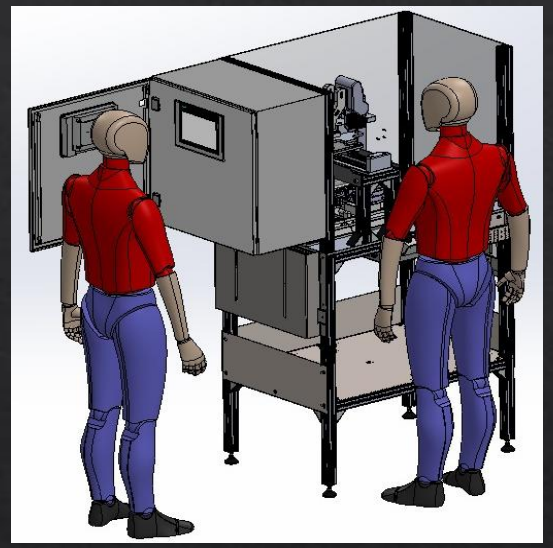

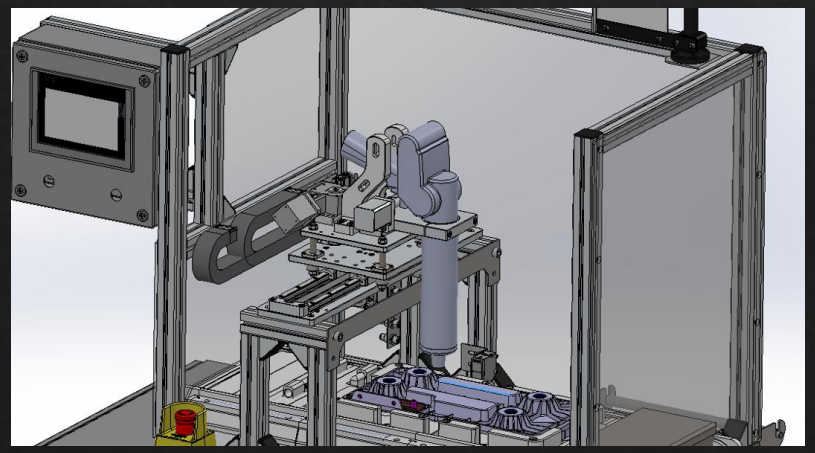

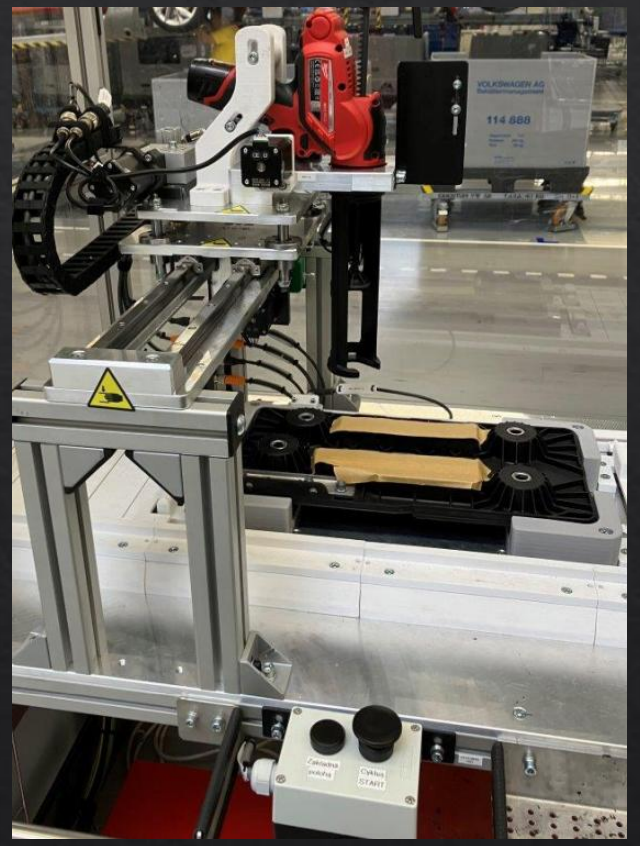

- Automated system set up to apply three adhesive lines on battery trays.
- Integrated signaling system alerts for adhesive cartridge replacement.
- Configured to ensure repeatable start/end positions for precise application

DUBLEX

TELESCOPIC CARBON ARM



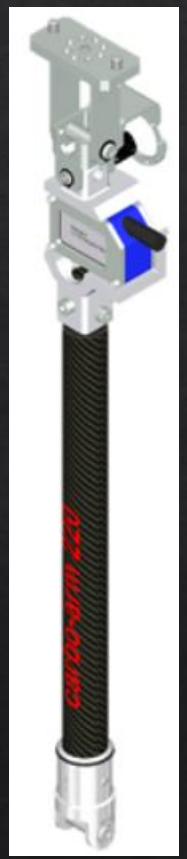

- Installation of new telescopic CARBON ARM, with electrical screw tightener
- Lightweight durable frame for easy operation
- Swivel and stroke sensors for exact position data as a prerequisite to clearance for starting of screw tightening
- Full integration into existing assembly line Interface



DUBLEX

SPECIALIZED FITMENT TOOLS





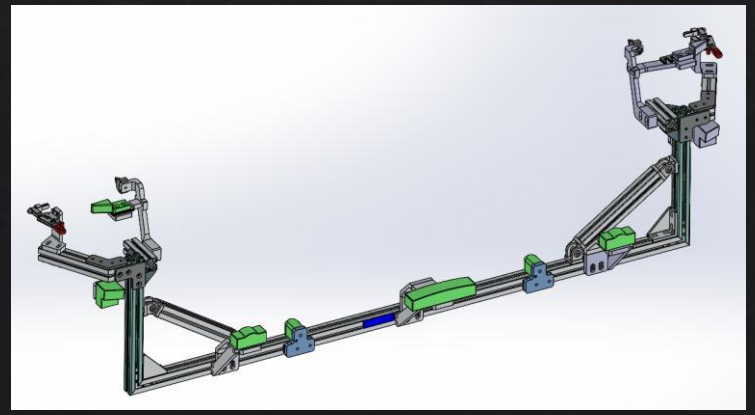

- Development and production of custom specialized fixtures for the assembly of various automotive parts
- We have successfully developed over a hundred specialized fixtures.
- From simple fixtures to pre-assembly tables

DUBLEX

3D PRINTING









- 3D printing is applicable in various fields
- We use it for prototype production, to speed up the testing process, and also for manufacturing different parts and fixtures
- Depending on quality, durability requirements, and application areas, we use various materials such as ABS, TPU, PA, CF JET, and others.
- We offer large-format 3D printing 600x600x600

DUBLEX

CONVEYOR BELT OVERHAUL





- Replacement of old and damaged rubber belts
- Installation of new modular plastic belts, with adherent surface for optimal operation
- Custom made new rotating shafts for new gear wheels
- New bearings and bearing housings

DUBLEX

CONSTRUCTION OF ELECTRICAL SWITCHGEAR

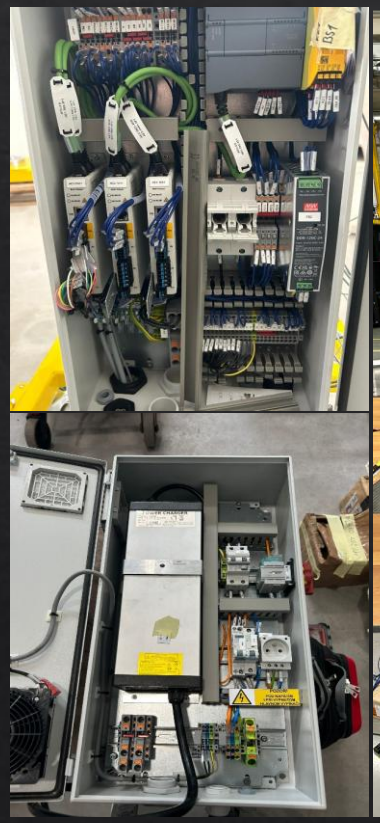





- Customized Solutions: Tailored designs to meet specific project requirements and industry standards.
- Quality Assurance: Rigorous testing and quality control processes to ensure reliability and safety.
- Expert Team: Experienced engineers and technicians dedicated to efficient assembly and installation.

DUBLEX

CONSTRUCTION OF STEEL STRUCTURES AND LIFTING SYSTEMS



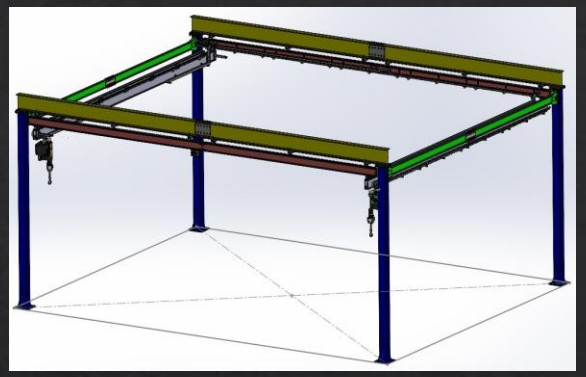





- Robust Design: Engineered for strength and durability, ensuring long-term performance in various applications.
- Versatile Solutions: Includes suspended systems and advanced lifting techniques tailored to project needs.
- Safety First: Comprehensive safety protocols and adherence to industry regulations for optimal operational safety.

DUBLEX

TOP customers

PORSCHE

Volkswagen

ŠKODA

JAGUAR

arriva

TT-TRANS, s.r.o.

SLOVENSKÁ METROLÓGIA LEGÁLNA

MVI PROPLANT

DUBLEX

THANK YOU



Ing. David Dubovský, M.Sc.

+421 948 006 957

david.dubovsky@dublex.sk

www.dublex.sk